Huck Finn Notes

Motor Mount and Deflector for single motor

The following are details from the Huck Finn plans for the center motorwell and deflector when using a single motor. The deflector is required to insure the proper flow of water to the propeller.

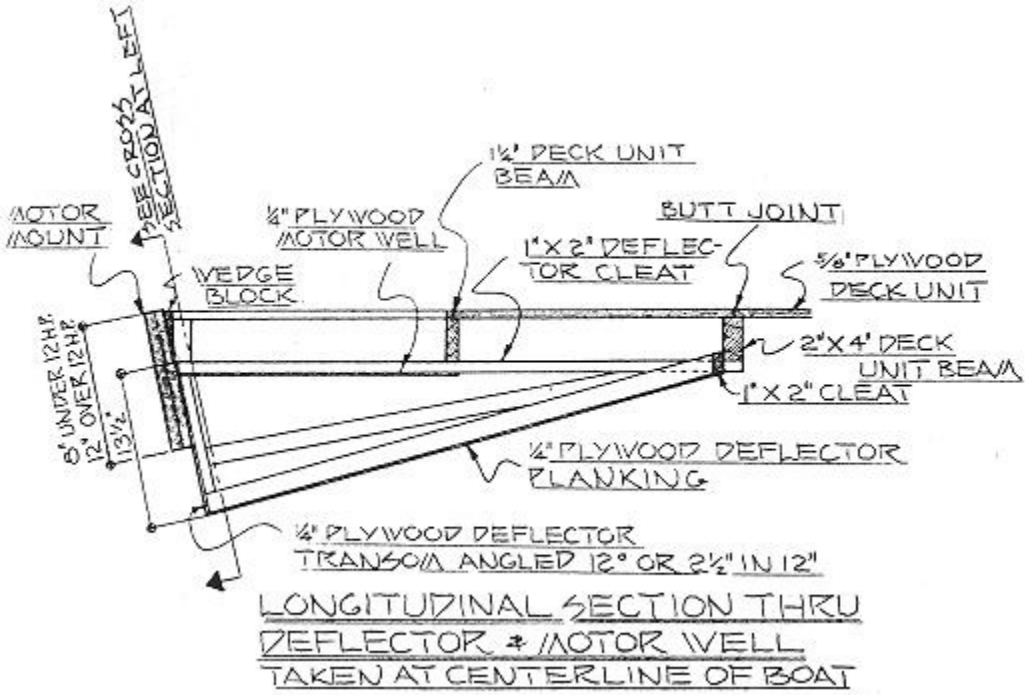

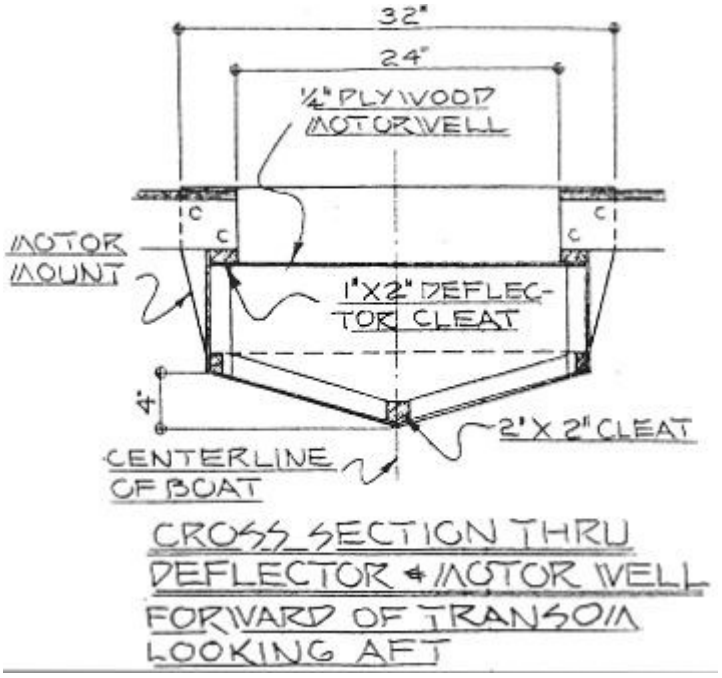

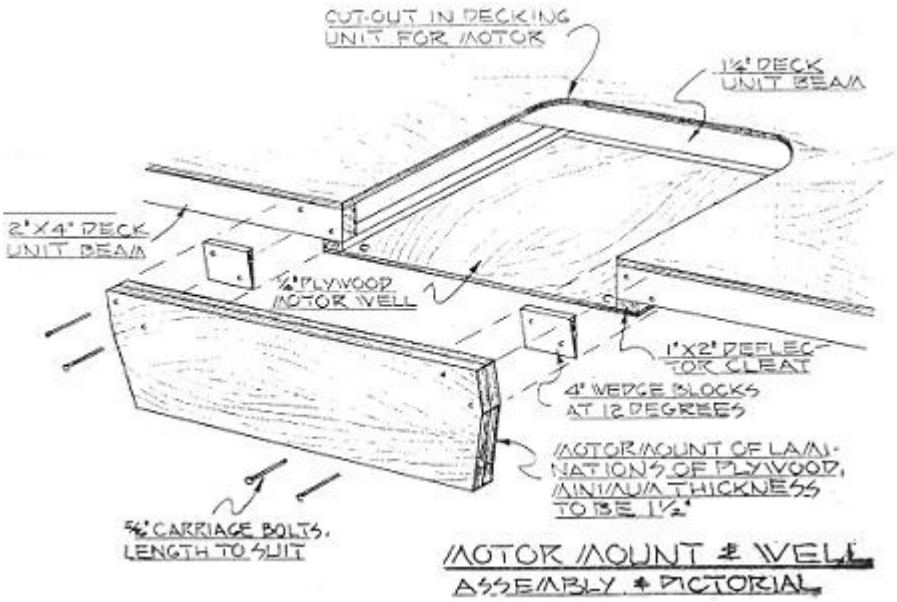

MOTOR MOUNT & WELL
ASSEMBLY & PICTORIAL

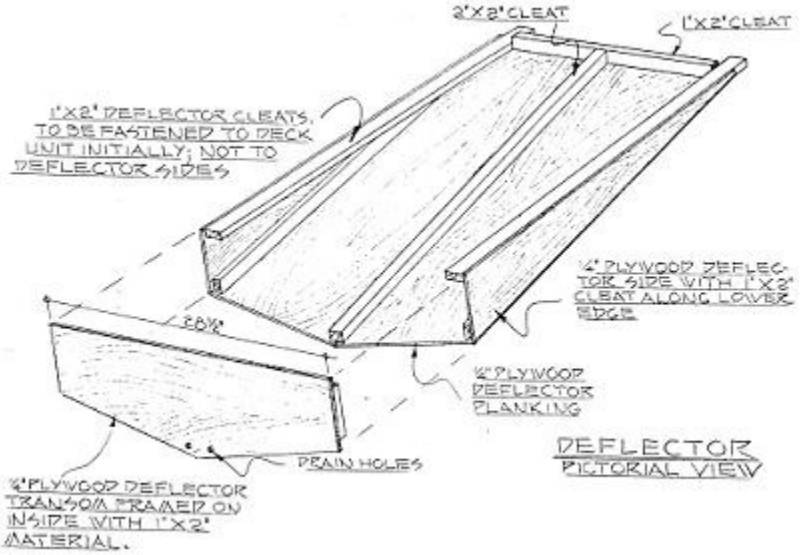

DEFLECTOR
PICTORIAL VIEW